Billionaire Lighting Co.Ltd.

Installation instructions

①

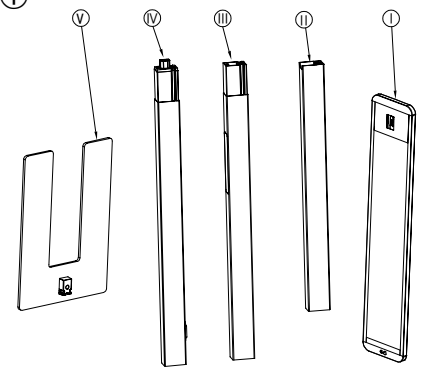

ScrewA		AX4
ScrewB		BX5
ScrewC		CX4
Hexagon driver		X1

②

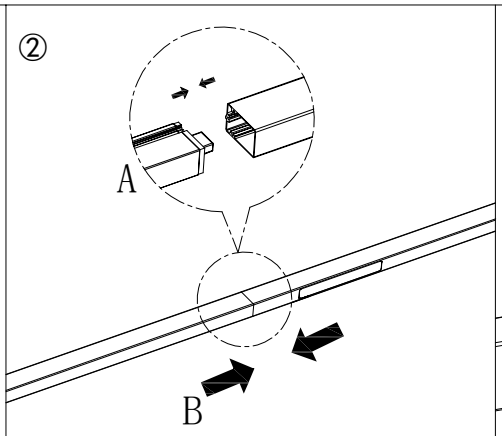

1. Unpack the lamp and remove all components.
2. Connect the pole cable terminals as shown in A.
3. Slide the pole sections together as shown in B.

③

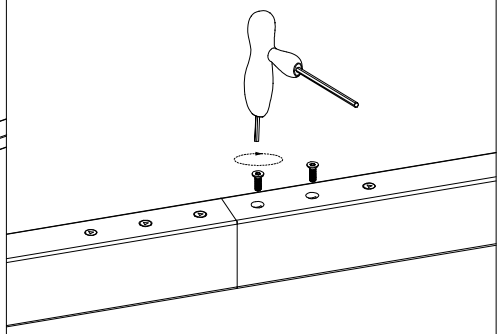

Use screws B and the hex key to secure the pole sections as illustrated.

④

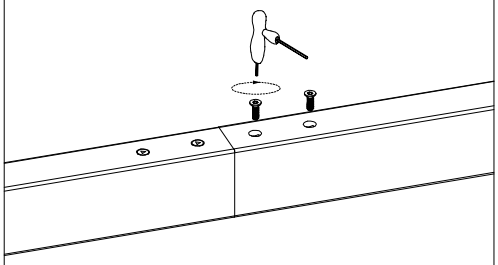

Use screws B and the hex key to secure the pole sections as illustrated.

⑤

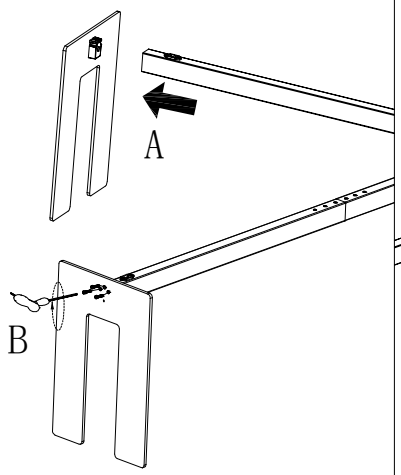

1. Secure the base against falling to prevent injury.
2. Place the pole onto the base as shown in A.
3. Connect the pole to the base with screws C and tighten with the hex key, as shown in B.

⑥

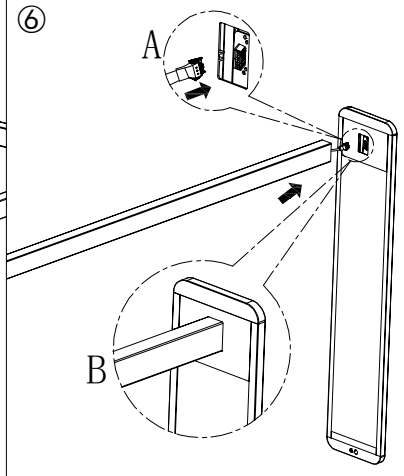

1. Connect the pole and lamp-head terminals as in A.
2. Join the pole to the lamp head as shown in B.

⑦

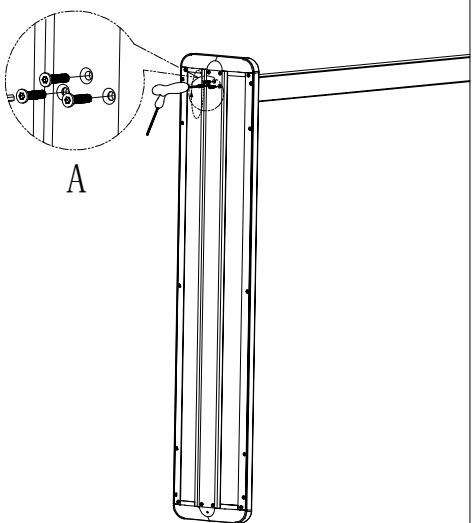

Use screws A from the accessory bag and the hex key to secure the lamp head to the pole as shown in A.

⑧

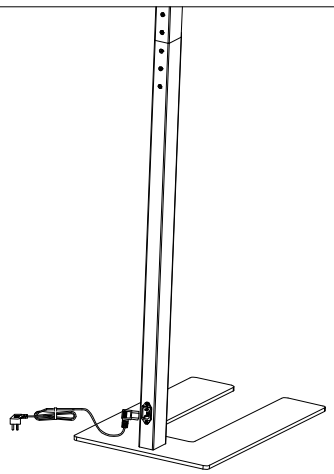

Insert the cable into the socket on the pole as shown in A and ensure a secure connection.

⑨

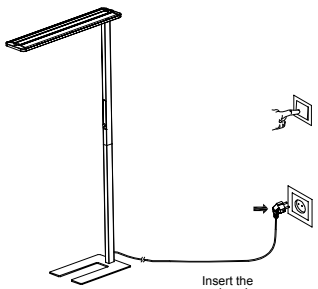

⚠ WARNING! An improper mains connection can cause a fatal electric shock. Ensure the power supply has a protective earth connection.

⚠ WARNING! Exposed electrical parts can cause a fatal electric shock. Fully assemble the lamp before connecting power.
CAUTION! Incorrect supply voltage can damage or destroy the lamp. Supply voltage and frequency must match the rated values.