Installation Manual

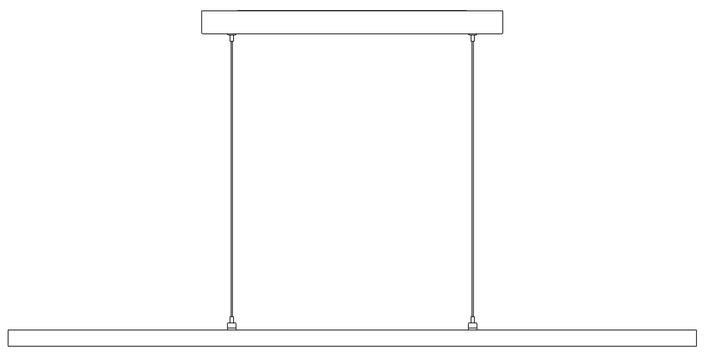

Product appearance shown is for reference only. Please refer to the actual product.

WARNING: Disconnect power before installation to prevent electric shock!

Expansion Plug A	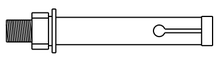	X2
Self-tapping Screw B		X2

① DRILLING

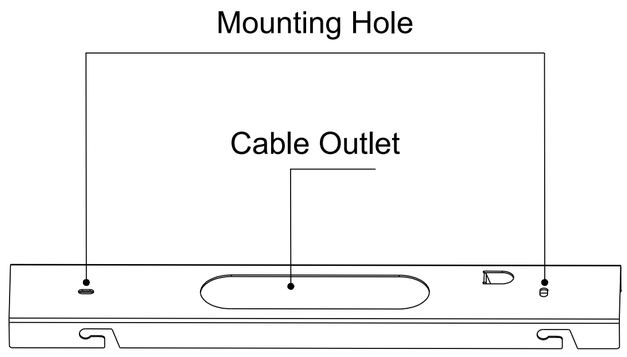

Mounting Bracket

1. Unpack and remove all parts of the pendant light.
2. Place the mounting bracket at the installation position, mark the hole locations, then remove the bracket.
3. Drill holes with a hand drill using a 6 mm bit to a depth of L ≥40 mm. Insert the 2 expansion plugs into the holes.

② SECURE MOUNTING BRACKET

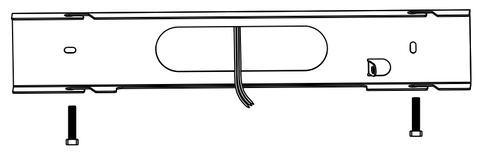

1. Feed the power cable through the cable outlet in the mounting bracket.
2. Insert the 2 self-tapping screws through the bracket mounting holes and tighten them into the expansion plugs.
3. After installation, make sure the bracket is securely fitted. Improper installation may cause the product to fall !

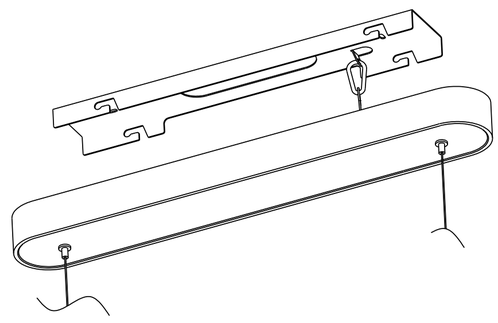

4. Hook the safety wire rope onto the mounting bracket.

③ POWER CABLE CONNECTION

1. The default power-cable height is 0.65 m. To adjust the height, follow the steps below:

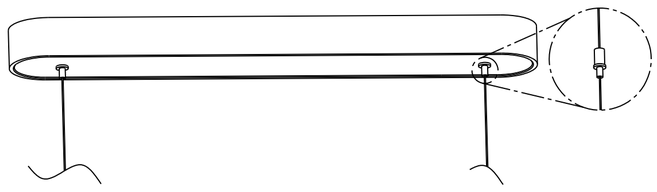

Press the cable gripper to adjust the cable length.
Maximum cable height: 0.85 m.

2. Strip 6-8 mm of insulation from the power cable.
3. According to the markings beside the fixture terminal, insert the live/neutral wires into the corresponding L/N terminals and tighten securely.

This product uses double-insulation protection. Do not damage the wire insulation, as leakage current may cause electric shock!
Disconnect power before removing the fixture!

④ INSTALL FIXTURE BODY

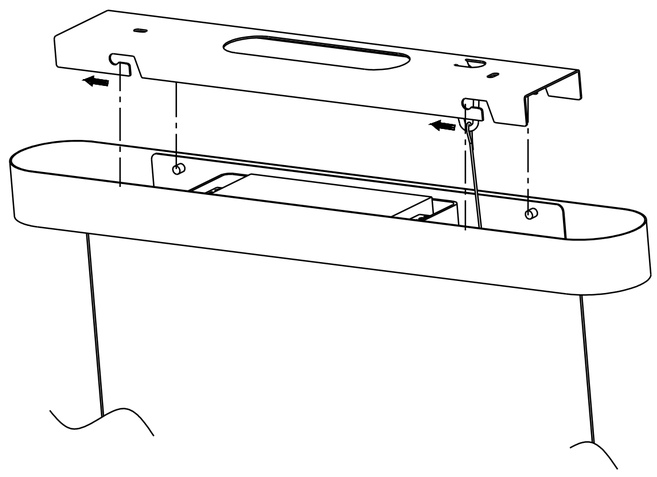

1. Hold both sides of the ceiling canopy with both hands. Align the four posts inside the canopy with the four slots in the mounting bracket and push upward to engage them.
2. Slide the ceiling canopy into the slots until the posts are fully engaged.

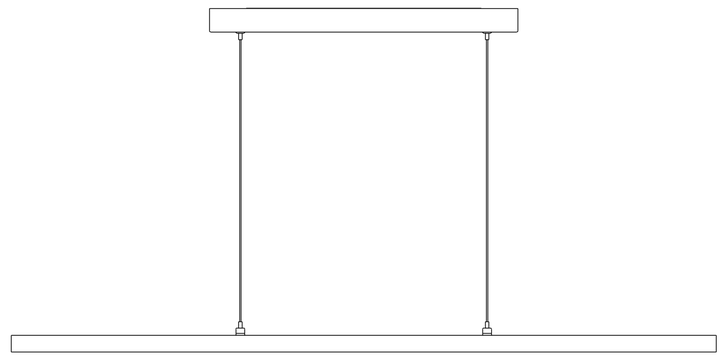

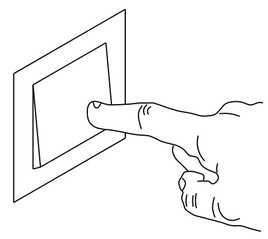

1. Connect the power only after installation is complete, then turn on the fixture.